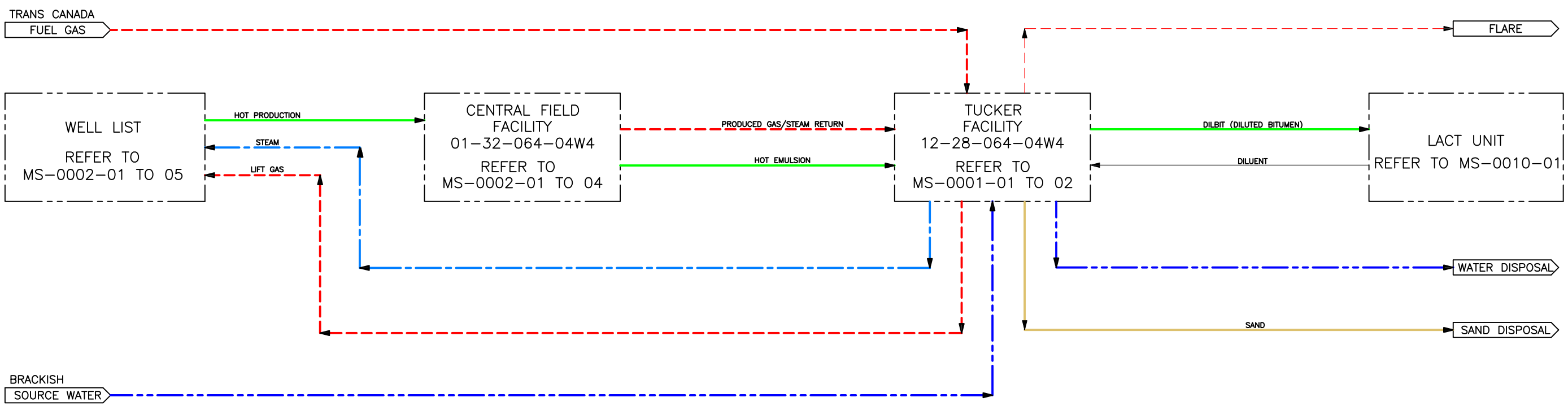


GASES — OIL/EMULSION — SAND
FLARE GAS — STEAM — WATER

SP SAMPLE POINT
PT PROVER TAPS
FLOW NOZZLE
STRAINER
PROBE STYLE OPTICAL
FR DCS
RTU PLC
NOA NET OIL ANALYZER
ROTAMETER
GOR TEMPORARY METER
PM PROCESS METER
ORIFICE METER
TURBINE METER
M MAGNETIC FLOW METER
VORTEX METER
MASS METER
THERMAL MASS METER
ULTRASONIC METER
POSITIVE DISPLACEMENT METER
V-CONE (WAFER CONE) METER
FR FLOW RECORDER
FQI FLOW TOTALIZER

22156

| REF DWG NO | REFERENCE DRAWING DESCRIPTION |
|---|---|
| MS-0001-01 & 02 | FACILITY DRAWING |
| MS-0002-01 TO 05 | GATHERING SYSTEM |
| MS-0007-01 | STEAM INJECTION SYSTEM |
| MS-0010-01 | LACT UNIT |

| NO | REVISION HISTORY | REV AUTHOR | REV DATE | ISSUED FOR |
|---|---|---|---|---|
| 1 | UPDATED PER FIELD SUPPLIED MARK UPS | EPC_CALTECH | 2006/07/26 | AS BUILT |
| 2 | UPDATED PER FIELD SUPPLIED MARK UPS | BRM | 2009/03/19 | AS BUILT |
| 3 | NO UPDATES FOR THIS REVISION FROM ALLYSON HADLAND | SK | 2014/08/20 | AS BUILT |
| 4 | UPDATED FROM MARK UPS SUPPLIED BY ALLYSON HADLAND | BRM | 2015/02/24 | AS BUILT |
| 5 | NO UPDATES FOR THIS REVISION FROM ALLYSON HADLAND | BRM | 2015/10/29 | AS BUILT |
| 6 | UPDATED FROM MARK UPS FROM ALLYSON HADLAND | SK | 2016/02/24 | AS BUILT |
| 7 | | | | |

| NO | CURRENT REVISION |
|---|---|
| 7 | NO UPDATES FOR THIS REVISION FROM ALLYSON HADLAND |

**Husky Oil Operations Limited**

TUCKER CENTRAL PLANT 12-28-064-04W4

AREA OVERVIEW
MEASUREMENT SCHEMATIC

| | |
|---|---|
| ISSUED FOR | AS BUILT |
| DOC DATE | 2016/08/12 |
| DOC AUTHOR | PC |
| SCALE | NTS |
| ALTERNATE IDENTIFIER | |
| SURFACE LSD | 12-28-064-04W4 |
| DOCUMENT IDENTIFIER | MS-0000-01 |

CAD DRAWING: DO NOT CHANGE MANUALLY