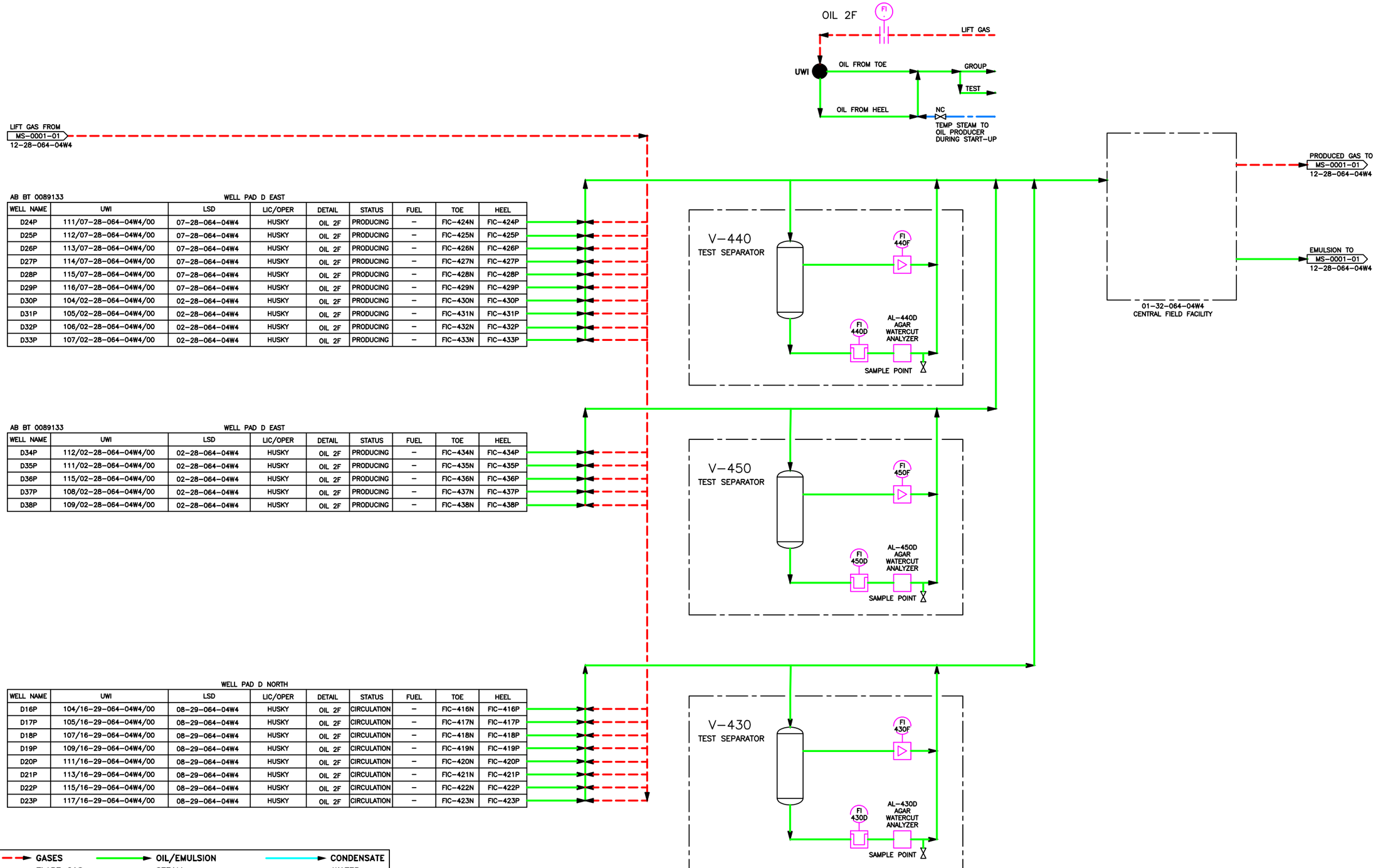

AB BT 0089133 — WELL PAD D EAST

WELL NAME	UWI	LSD	LIC/OPER	DETAIL	STATUS	FUEL	TOE	HEEL
D24P	111/07-28-064-04W4/00	07-28-064-04W4	HUSKY	OIL 2F	PRODUCING	–	FIC-424N	FIC-424P
D25P	112/07-28-064-04W4/00	07-28-064-04W4	HUSKY	OIL 2F	PRODUCING	–	FIC-425N	FIC-425P
D26P	113/07-28-064-04W4/00	07-28-064-04W4	HUSKY	OIL 2F	PRODUCING	–	FIC-426N	FIC-426P
D27P	114/07-28-064-04W4/00	07-28-064-04W4	HUSKY	OIL 2F	PRODUCING	–	FIC-427N	FIC-427P
D28P	115/07-28-064-04W4/00	07-28-064-04W4	HUSKY	OIL 2F	PRODUCING	–	FIC-428N	FIC-428P
D29P	116/07-28-064-04W4/00	07-28-064-04W4	HUSKY	OIL 2F	PRODUCING	–	FIC-429N	FIC-429P
D30P	104/02-28-064-04W4/00	02-28-064-04W4	HUSKY	OIL 2F	PRODUCING	–	FIC-430N	FIC-430P
D31P	105/02-28-064-04W4/00	02-28-064-04W4	HUSKY	OIL 2F	PRODUCING	–	FIC-431N	FIC-431P
D32P	106/02-28-064-04W4/00	02-28-064-04W4	HUSKY	OIL 2F	PRODUCING	–	FIC-432N	FIC-432P
D33P	107/02-28-064-04W4/00	02-28-064-04W4	HUSKY	OIL 2F	PRODUCING	–	FIC-433N	FIC-433P

AB BT 0089133 — WELL PAD D EAST

WELL NAME	UWI	LSD	LIC/OPER	DETAIL	STATUS	FUEL	TOE	HEEL
D34P	112/02-28-064-04W4/00	02-28-064-04W4	HUSKY	OIL 2F	PRODUCING	–	FIC-434N	FIC-434P
D35P	111/02-28-064-04W4/00	02-28-064-04W4	HUSKY	OIL 2F	PRODUCING	–	FIC-435N	FIC-435P
D36P	115/02-28-064-04W4/00	02-28-064-04W4	HUSKY	OIL 2F	PRODUCING	–	FIC-436N	FIC-436P
D37P	108/02-28-064-04W4/00	02-28-064-04W4	HUSKY	OIL 2F	PRODUCING	–	FIC-437N	FIC-437P
D38P	109/02-28-064-04W4/00	02-28-064-04W4	HUSKY	OIL 2F	PRODUCING	–	FIC-438N	FIC-438P

WELL PAD D NORTH

WELL NAME	UWI	LSD	LIC/OPER	DETAIL	STATUS	FUEL	TOE	HEEL
D16P	104/16-29-064-04W4/00	08-29-064-04W4	HUSKY	OIL 2F	CIRCULATION	–	FIC-416N	FIC-416P
D17P	105/16-29-064-04W4/00	08-29-064-04W4	HUSKY	OIL 2F	CIRCULATION	–	FIC-417N	FIC-417P
D18P	107/16-29-064-04W4/00	08-29-064-04W4	HUSKY	OIL 2F	CIRCULATION	–	FIC-418N	FIC-418P
D19P	109/16-29-064-04W4/00	08-29-064-04W4	HUSKY	OIL 2F	CIRCULATION	–	FIC-419N	FIC-419P
D20P	111/16-29-064-04W4/00	08-29-064-04W4	HUSKY	OIL 2F	CIRCULATION	–	FIC-420N	FIC-420P
D21P	113/16-29-064-04W4/00	08-29-064-04W4	HUSKY	OIL 2F	CIRCULATION	–	FIC-421N	FIC-421P
D22P	115/16-29-064-04W4/00	08-29-064-04W4	HUSKY	OIL 2F	CIRCULATION	–	FIC-422N	FIC-422P
D23P	117/16-29-064-04W4/00	08-29-064-04W4	HUSKY	OIL 2F	CIRCULATION	–	FIC-423N	FIC-423P

GASES — OIL/EMULSION — CONDENSATE
FLARE GAS — STEAM — WATER

SP SAMPLE POINT
PT PROVER TAPS
FLOW NOZZLE
S STRAINER
P PROBE STYLE OPTICAL
FR DCS
RTU PLC
NOA NET OIL ANALYZER
ROTAMETER
GOR TEMPORARY METER
PM PROCESS METER
ORIFICE METER
TURBINE METER
M MAGNETIC FLOW METER
VORTEX METER
MASS METER
THERMAL MASS METER
ULTRASONIC METER
POSITIVE DISPLACEMENT METER
V-CONE (WAFER CONE) METER
FR FLOW RECORDER
FQI FLOW TOTALIZER

80022206

REF DWG NO	REFERENCE DRAWING DESCRIPTION
MS-0000-01	AREA OVERVIEW
MS-0001-01 & 02	FACILITY DRAWING
MS-0002-01,02,03&05	GATHERING SYSTEM
MS-0007-01	STEAM INJECTION SYSTEM
MS-0010-01	LACT UNIT

NO	REVISION HISTORY	REV AUTHOR	REV DATE	ISSUED FOR
8	UPDATED PER MARK UPS FROM ALLYSON HADLAND	SK	2016/02/24	AS BUILT
9	NO UPDATES FOR THIS REVISION FROM ALLYSON HADLAND	PC	2016/08/12	AS BUILT
3	UPDATED PER MARK UPS FROM ALLYSON HADLAND	SK	2014/08/20	AS BUILT
4	UPDATED FROM MARK UPS SUPPLIED BY ALLYSON HADLAND	BRM	2015/02/24	AS BUILT
5	UPDATED FROM MARK UPS SUPPLIED BY PETE CURRAN	BRM	2015/07/06	AS BUILT
6	UPDATED FROM MARK UPS SUPPLIED BY PETE CURRAN	BRM	2015/07/27	AS BUILT
7	NO UPDATES FOR THIS REVISION FROM ALLYSON HADLAND	BRM	2015/10/29	AS BUILT

NO	CURRENT REVISION
10	UPDATED FROM MARK UPS FROM ALLYSON HADLAND

Husky Oil Operations Limited

TUCKER CENTRAL PLANT 12-28-064-04W4

GATHERING SYSTEM-D PADS EAST AND NORTH
MEASUREMENT SCHEMATIC

ISSUED FOR	AS BUILT
DOC DATE	2017/01/19
DOC AUTHOR	SK
SCALE	NTS
ALTERNATE IDENTIFIER	
SURFACE LSD	12-28-064-04W4
DOCUMENT IDENTIFIER	MS-0002-04

CAD DRAWING: DO NOT CHANGE MANUALLY