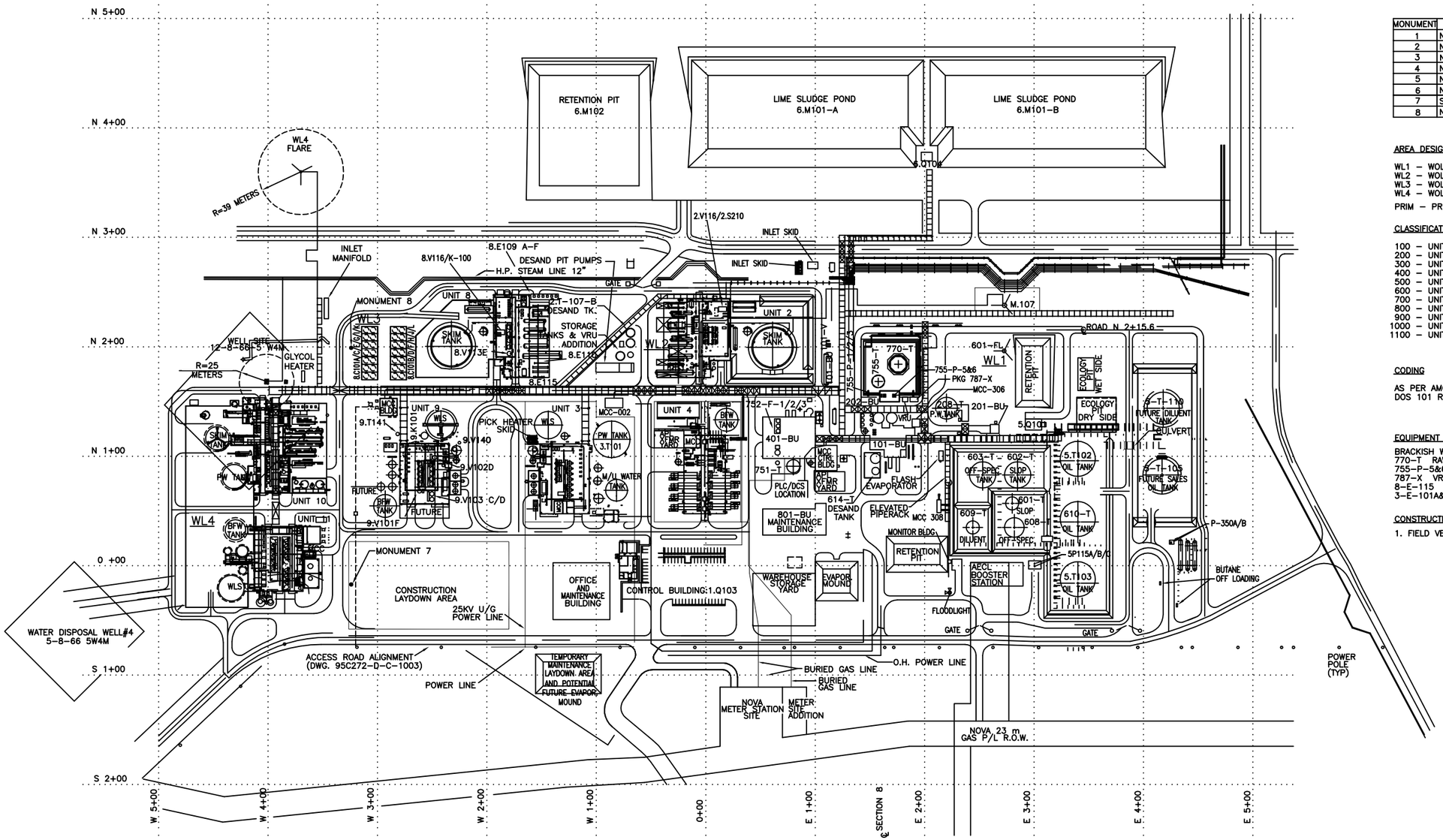

MONUMENT	COORDINATES	ELEVATION
1	N 0+34.079 E 2+27.450	101.231
2	N 1+94.651 E 2+62.098	99.770
3	N 2+01.507 E 1+47.069	101.417
4	N 1+37.622 E 1+14.950	100.026
5	N 1+94.046 E 0+14.463	99.885
6	N 0+06.812 E 0+25.347	99.950
7	S 0+17.110 W 3+24.020	98.220
8	N 1+99.130 W 3+24.020	98.350

AREA DESIGNATION

WL1 – WOLF LAKE 1 PLANT
WL2 – WOLF LAKE 2 PLANT
WL3 – WOLF LAKE 3 PLANT
WL4 – WOLF LAKE 4 PLANT

PRIM – PRIMROSE COMMERCIAL PLANT

CLASSIFICATION

100 – UNIT 1 – OFFSITES
200 – UNIT 2 – OIL PROCESSING
300 – UNIT 3 – WATER TREATMENT
400 – UNIT 4 – STEAM GENERATION
500 – UNIT 5 – TANK FARM
600 – UNIT 6 – LIME SLUDGE PONDS
700 – UNIT 7 – COOLING TOWER
800 – UNIT 8 – OIL PROCESSING
900 – UNIT 9 – WATER TREATMENT
1000 – UNIT 10 – OIL PROCESSING
1100 – UNIT 11 – WATER TREATMENT

CODING

AS PER AMOCO DRAFTING OFFICE SPECIFICATIONS DOS 101 REV. 1 25/07/94

EQUIPMENT FOR BRACKISH WATER UPGRADE

BRACKISH WATER INLET SKID
770–T RAW BRACKISH WATER TANK
755–P–5&6 RAW BRACKISH PUMPS
787–X VRU PACKAGE
8–E–115 RAW BRACKISH / GLYCOL EXCHANGER SKID
3–E–101A&B DIRECT STEAM INJECTION HEATERS SKID

CONSTRUCTION NOTES:

1. FIELD VERIFIED BUT NOT AS BUILT.

NOTES: LIVE SERVICES TO BE DE-ENERGIZED AFTER REALIGNMENT
–EXISTING 25KV O/H LINE
–EXISTING 8" WATER DISPOSAL LINE – REMOVED 5/96
–EXISTING COMMUNICATIONS CABLES
(ALL PARALLEL TO EXISTING ACCESS ROAD)
1. THE COORDINATE IS BASED ON WOLF LAKE PLANT COORDINATE SYSTEM.
2. PLANT EL. 100.000 IS EQUAL TO GEODETIC EL. 640.000.

100 50 0 100 200
ALL DIMENSIONS ARE IN METERS UNLESS NOTED OTHERWISE

DRAWING NO.	REFERENCE DRAWINGS
WLP–AU–210–0037	WOLF LAKE 4 – UNIT 10, UNIT 11 AND OFFSITES PLOT PLAN
WLP–AU–210–0011	WL 1,2&3 CENTRAL FACILITIES SITE PLAN

DRAWING PREPARED BY: HOCS PROJECTS #1410

REV.	DESCRIPTION	BY	DATE	CHK	APP.	CLIENT
6	PW DEBOTTLENECK – AS–BUILT (HOCS #1410)(FCR#:2014–WLP–149 TO 153)		2015.09.09		JK	RB
5	PW DEBOTTLENECK – ISSUED FOR CONSTRUCTION (HOCS #1410)(FCR#:2014–WLP–149 TO 153)	MAN	2015.03.05	NS	DR	RB
4	ADDED CENTRIFUGE BUILDING AND STRAGE TANKS (110615384–02)	JRM	2013.02.15			
3	FRESH WATER REDUCTION PHASE 2 – ISSUED FOR CONSTRUCTION (UEL 2012301)	MSD	2012.11.02	KLL	JYN	
2	5P–115C ADDITION	KK	2011.01.12	JR		
1	ADD EQUIP FOR BRACKISH WATER UPGRADE (VISTA 1777) ISSUE FOR CONSTR.	8M	2011.09.15			
0	ISSUED FOR CONSTRUCTION (WPM 054044)	JZ	2007.04.20	GD	DG	HS

DRAWN BY: GD	DATE 2006–08–29
DESIGNED BY: GD	DATE 2006–08–29
CHECKED BY: YKM	DATE 2006–08–29
APPROVED BY: DG	DATE 2006–08–29
CLIENT BY:	DATE

Canadian Natural

HOCS PROJECTS

TITLE
WOLF LAKE 4
ALL UNITS
SITE PLAN

SCALE	JOB NO.	DRAWING NO.	REV.
1:2000	054044	WLP–AU–210–0038	6

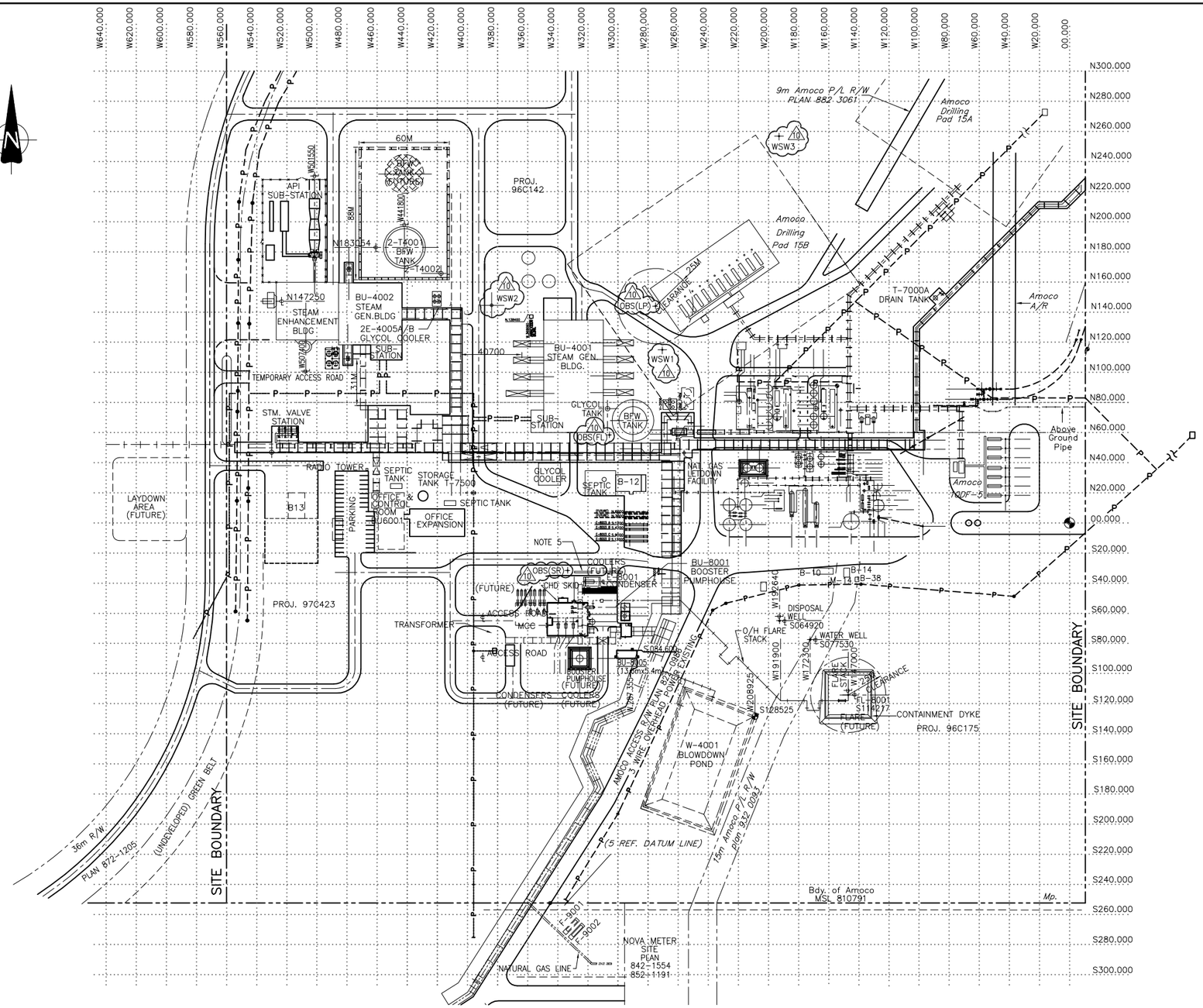

NOTES:

1. GENERATOR STACK HEIGHTS 27.5M ON FIRST 2 UNITS.
2. MAIN PILOT DATUM W00000/N00000 EQUALS GEODETIC 18348.100S/2114.105W OF NE 33 68 4 W4M.
3. PLANT ELEVATION 100000 EQUALS GEODETIC 683.485.
4. ALL DIMENSIONS, COORDINATES AND ELEVATIONS ARE IN METERS.
5. BACKFILL FOR VEHICLE ACCESS TO THE NORTH OF BUILDING.

LEGEND

P — — P — — P	EXISTING OVERHEAD POWER LINE
P —— P —— P	NEW & MODIFIED UNDERGROUND APL LINE.
P —— P —— P	NEW OVERHEAD APL LINE.

B-13	CONSTRUCTION WAREHOUSE (RELOCATED BUILDING)
B-12	CONTROL CENTER & DCS BUILDING
BU-4001	STEAM GENERATION BUILDING
BU-4002	CONVENTIONAL OR CO-GEN.
BU-6001	OFFICE & CONTROL ROOM
BU-8001	BOOSTER PUMPHOUSE (NEW)
BU-8005	
E-8001	CONDENSER
W-4001	BLOWDOWN POND
WSW1	WATER SUPPLY WELL #1 (10C3) 10-05
WSW2	WATER SUPPLY WELL #2 (14A1) 14-05
WSW3	WATER SUPPLY WELL #3 (15B1) 15-05
OBS(EL)	GROUND WATER OBSERVATION WELL 10C3B (EL)
OBS(SR)	GROUND WATER OBSERVATION WELL 98-1 (SR)
OBS(LP)	GROUND WATER OBSERVATION WELL 10-05 (LP)

DRAWING NO	REFERENCE DRAWINGS	REV	REVISION DESCRIPTION	BY	DATE	CHKD	APPD	CNRL APPD
PRP-MP-210-0001	PRIMROSE PILOT PLANT PLOT PLAN	7	ADDED SWEETENING UNIT	CT	11/02/25	JR		
PRP-AU-210-0001	STEAM GENERATION FACILITIES PLOT PLAN	6	AS-BUILT AS PER FIELD MARK-UPS	VB	05/09/06			
PRP-AU-210-0002	BLOWDOWN POND PLOT PLAN	5	TRANSFORMER RELOCATED TO SCALE (PROJ. 97CSEP)	GRT	98/04/03			
PRP-U8-210-0001	BOOSTER PUMP STATION PLOT PLAN	4	REVISED AS SHOWN (PROJ. 97C423, 96C142 & 96C175))	KT	98/01/27	ZT	KJS	
		3	ISSUED FOR CONSTRUCTION (97CSEP)	RB				
		10	UPDATED AS PER FIELD INFORMATION - ADDED SUPPLY & OBSERVATION WELLS	HN	2016-12-09	JNZ		
		9	OFFICE BUILDING EXPANSION (FCR 2012-PSP-0007)	MF	2013-01-08	JC		
		8	PSP SEPTIC SYSTEM UPGRADE (AS PER FCR 2011-PSP-031)	KK	2012-03-20	RC		

ENGINEER'S STAMP

ENGINEERING RECORD	BY	DATE
DESIGNED	MN	97/01/06
DRAWN		
CHECKED	AL	97/01/06
PROCESS CK.		
MECH. CK.		
STRUCT. CK.		
ELECT. CK.		
INSTRUM. CK.		
COLT APP.		
CNRL APP.		

Canadian Natural Resources Limited
CALGARY ALBERTA

AREA/PROJECT PRIMROSE COMMERCIAL
PREPARED BY COLT ENGINEERING CORPORATION

TITLE
PRIMROSE COMMERCIAL
SITE PLAN

10-05-067-04W4

SCALE 1:1500
CONTR DWG NO 93-C-474-D-A-4000
CNRL DWG NO REF. No PRP14-210-05
D- PRP-AU-210-0004
REV 10

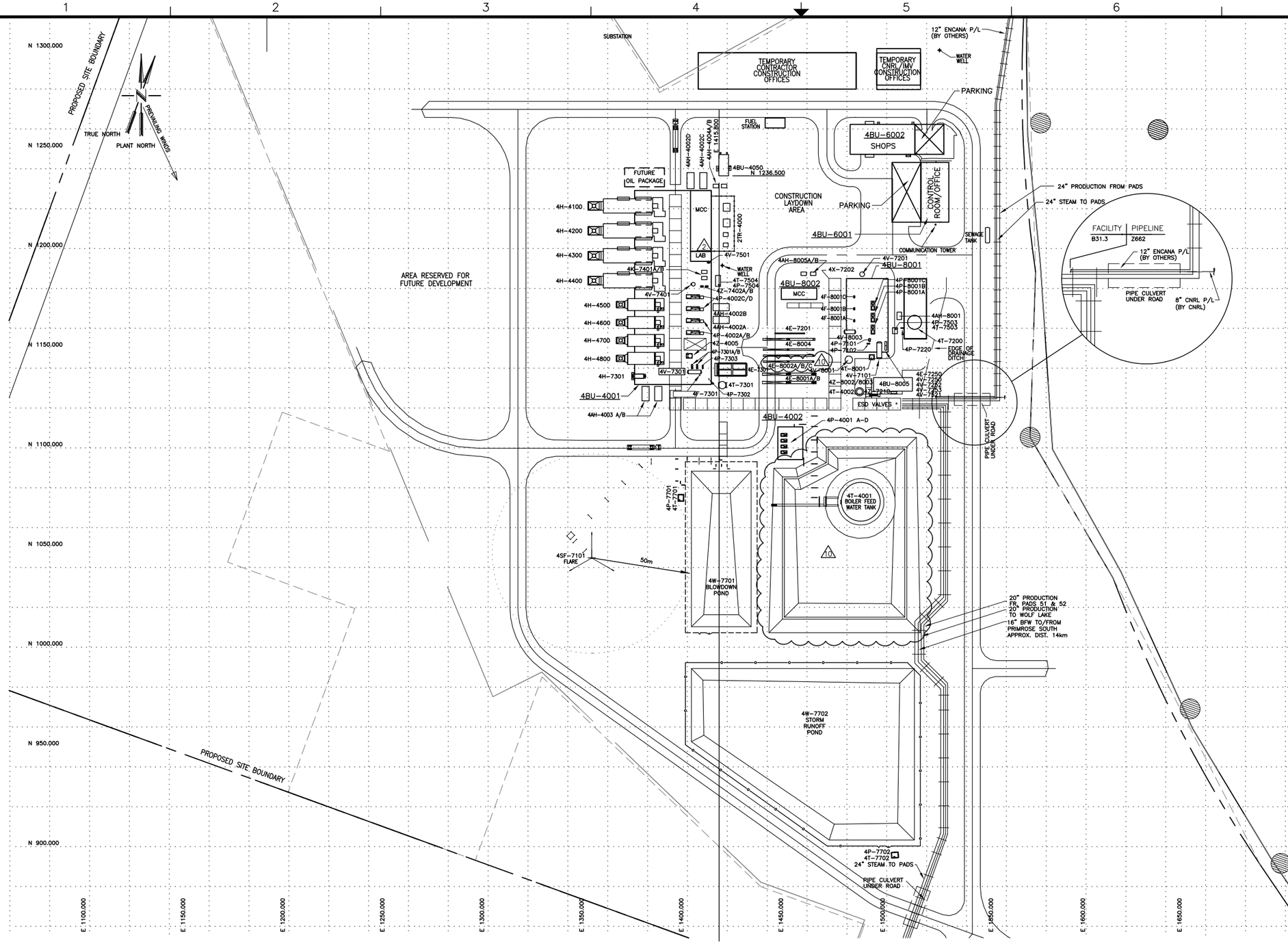

EQUIPMENT TAGS	DESCRIPTION
BLOWERS AND FANS	
4B-4100 THRU 4800	COMBUSTION AIR BLOWERS (ON 4H-4100-4800)
BUILDINGS	
4BU-4001	STEAM GENERATOR BUILDING
4BU-4002	BFW PUMP BUILDING
4BU-6001	CONTROL ROOM/OFFICE BUILDING
4BU-6002	WAREHOUSE/SHOP
4BU-8001	PROCESS BUILDING
4BU-8002	PROCESS BUILDING MCC
4BU-8005	SLUG CATCHER BUILDING
4BU-4050	EMERGENCY GENERATOR BUILDING
EXCHANGERS/COOLERS	
4E-4100 THRU 4800	COMBUSTION AIR HEATERS
4E-7201	FUEL GAS HEATER
4E-7250	SITE GAS HEATER
~~4E-7301~~	GLYCOL COOLER
4E-8001 A/B/C (10)	EMULSION/BFW EXCHANGERS
~~4E-8002 A/B~~	PRODUCED GAS CONDENSERS
4E-8004	EMULSION COOLER
FILTERS	
4F-7301	GLYCOL FILTER
4F-8001 A-C	EMULSION PUMP FILTERS
STEAM GENERATORS	
4H-4100 THRU 4400	HP STEAM GENERATORS (TIW)
4H-4500 THRU 4800	WL1HP STEAM GENERATORS (NATCO)
COMPRESSORS	
4K-7401 A/B	INSTRUMENT AIR COMPRESSORS
PUMPS	
4P-4001 A-D	BFW BOOSTER PUMPS
4P-4002 A-D	HP BFW PUMPS
4P-4005 A/B	POLYMER/CHELANT INJECTION PUMPS (ON 4Z-4005)
4P-7101	FLARE KNOCKOUT PUMP (RECIPROCATING)
4P-7102	FLARE KNOCKOUT PUMP (CENTRIFUGAL)
4P-7210	METHANOL INJECTION PUMP (ON 4Z-7210)
4P-7220	WATER TRANSFER PUMP
4P-7301 A/B	GLYCOL CIRCULATION PUMPS
4P-7302	GLYCOL CHARGE PUMP
4P-7303	GLYCOL HEATER RECYCLE PUMP
4P-7501	DOMESTIC WATER WELL SUBMERSIBLE PUMP
4P-7503	PROCESS BUILDING SUMP PUMP
4P-7504	STEAM GENERATOR BUILDING SUMP PUMP
4P-7701	BLOWDOWN POND SUMP PUMP
4P-7702	RUNOFF POND SUMP PUMP
4P-8001 A-C	EMULSION PUMPS
4P-8002 A/B	DEMULSIFIER INJECTION PUMPS (ON 4Z-8002)
4P-8003	DEFOAMING POLYMER PUMP (ON 4Z-8003)
TANKS	
4T-4001	BFW STORAGE TANK
4T-4002	STEAM CONDENSATE DRAIN TANK
4T-4004	FILMING AMINE TANK
4T-4005	POLYMER/CHELANT TANK
4T-7200	WATER STORAGE TANK
4T-7210	METHANOL TANK
4T-7301	GLYCOL STORAGE TANK
4T-7503	PROCESS BUILDING SUMP
4T-7504	STEAM GENERATOR BUILDING SUMP
4T-7701	BLOWDOWN POND SUMP
4T-7702	RUNOFF POND SUMP
4T-8001	DEMULSIFIER STORAGE TANK
VESSELS	
4V-7101	FLARE KNOCKOUT DRUM
4V-7201	FUEL GAS MIXING DRUM
4V-7250	ENCANA SITE GAS SLUG CATCHER
4V-7251	ENCANA SITE GAS PIG RECEIVER
4V-7252	CNRL SITE GAS SLUG CATCHER
4V-7253	CNRL SITE GAS PIG RECEIVER
4V-7301	GLYCOL EXPANSION DRUM
4V-7401	INSTRUMENT AIR RECEIVER
4V-7501	UTILITY WATER PRESSURE TANK
4V-7503	DELETED
4V-7504	DELETED
4V-8001	PRODUCTION SEPARATOR
4V-8003	PRODUCED GAS SEPARATOR
MISCELLANEOUS EQUIPMENT	
4X-7202	UTILITY FUEL GAS ODORIZER
4X-7501	DELETED
4X-7502	DELETED
4SF-7101	FLARE STACK
2TR-4000	TRANSFORMER
4W-7701	BLOWDOWN POND
4W-7702	STORM RUNOFF POND
PACKAGED EQUIPMENT	
4Z-4005	POLYMER/CHELANT INJECTION PACKAGE
4Z-7210	METHANOL INJECTION PACKAGE
4Z-7401 A/B	INSTRUMENT AIR COMPRESSOR PACKAGES
4Z-7402 A/B	INSTRUMENT AIR DRYER PACKAGES
4Z-8002	DEMULSIFIER INJECTION PACKAGE
4Z-8003	DEFOAMING POLYMER INJECTION PACKAGE
HEATING AND VENTILATION EQUIPMENT	
4H-7301	GLYCOL HEATER
4AH-4002 A-D	AIR MAKEUP UNITS FOR STEAM GENERATION BUILDING
4AH-4003 A/B	AIR MAKEUP UNITS FOR STEAM GENERATION BUILDING
4UH-4001 A-M	UNIT HEATERS FOR STEAM GENERATOR BUILDING
4UH-4002 A-B	UNIT HEATERS FOR BOILER FEEDWATER BUILDING
4UH-8001 A-G	UNIT HEATERS FOR PROCESS BUILDING
4AH-8001	AIR MAKEUP UNIT FOR PROCESS BUILDING
4AH-4004A/B	A/C PACKAGE FOR STEAM GENERATOR MCC BUILDING
4AH-8005A/B	A/C PACKAGE FOR PROCESS MCC BUILDING

Concise Design
Engineering Services
300, 736 – 6 Avenue S.W. Calgary, Alberta T2P 3T7 Telephone: (403) 237-7160 Fax: (403) 237-7166

9

DRAWING NO.	REFERENCE DRAWINGS	DRAWINGS PREPARED BY :

REV.	DESCRIPTION	BY	DATE	CHK	APP.	CLIENT
7	SLUG CATCHER ADDITION – ISSUED FOR CONSTRUCTION (CONCISE JOB #2423.00)	DI	05-09-29			
6	SLUG CATCHER ADDITION – ISSUED FOR BID (CONCISE JOB #2423.00)	DI	05-08-30			
5	SLUG CATCHER ADDITION – I.F. CNRL P/L CONSTRUCTION (CONCISE JOB #2423.00)	DI	05-08-17			
4	SLUG CATCHER ADDITION – I.F.A. (CONCISE JOB #2423.00)	DI	05-07-27			
10	4E-8001C ADDITION & SECONDARY CONTAINMENT MODIFICATIONS	KK	2012-01-11	JR		
9	ADD EMERGENCY GENERATOR BUILDING (2423.01) – ISSUED FOR CONSTRUCTION	JB	06/10/30			
8	ADD EMERGENCY GENERATOR BUILDING (2423.01) – ISSUED FOR BID	DI	06-10-06			
0	ISSUED FOR CONSTRUCTION	TLM	04/08/04	IC	RB	

DRAWN BY: IAN CLARK	DATE 03/11/17	Canadian Natural	IMV Projects
DESIGNED BY: IAN CLARK	DATE 03/11/17	TITLE NW 1/4 SEC.8 TWP.68 RGE.4 W 4MER. PRIMROSE NORTH PLANT PROJECT PLOT PLAN	
CHECKED BY: ALAN SMITH	DATE 03/11/17		
APPROVED BY: LUU NGO	DATE 03/11/17		
CLIENT BY: CNRL	DATE 03/12/04		

SCALE	AFE	JOB NO.	DRAWING NO.	REV.
1:1000	F03P4335	Z02702	PNP-AU-210-0001	10

SCALE APPLIES IF PLOTTED ON SIZE "D" (22"x34")

FILE NAME: G:\2423.01\DRAWINGS\MECH\PNP-AU-210-0001.DWG -- MENU: C:\ACADUSER\SUPPORT\ACAD -- PLOTTED: 2006.11.14 2:24pm -- jbarber

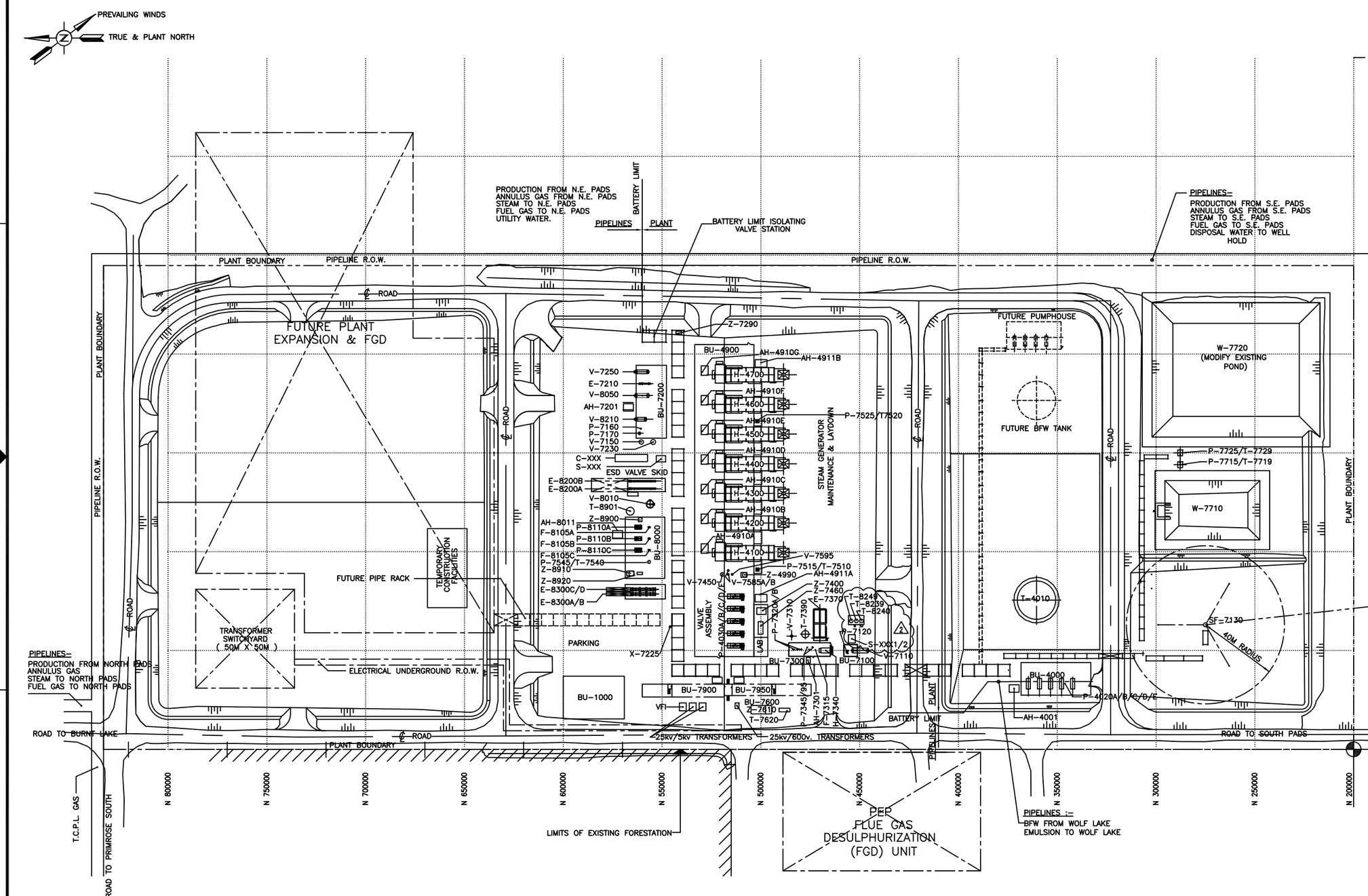

EQUIPMENT LIST

TAGS	DESCRIPTIONS
AH-4001	AIR MAKE-UP UNIT LP BFW PUMP BUILDING
AH-4910A/B/C/D/E/F/G	AIR MAKE-UP UNIT STEAM GEN. BLDG.
AH-4911A/B	AIR MAKE-UP UNIT STEAM GEN. BUILDING
AH-4901	AIR MAKE-UP UNIT LABORATORY
AH-7201	AIR MAKE-UP UNIT GAS BUILDING
AH-7301	AIR MAKE-UP UNIT UTILITY BUILDING
AH-8011	AIR MAKE-UP UNIT PROCESS BUILDING
BU-1000	CONTROL ROOM/WAREHOUSE
BU-4000	LP BFW PUMP BUILDING
BU-4900	STEAM GENERATOR BULDING
BU-7100	FLARE KNOCKOUT BUILDING
BU-7200	GAS BUILDING
BU-7300	UTILITY BUILDING
BU-7600	EMERGENCY GENERATOR BUILDING
BU-7900	5kV MCC BUILDING
BU-7950	600 V MCC BUILDING
BU-8000	PROCESS BUILDING
E-7210	FUEL GAS HEATER
E-7370	GLYCOL COOLER
E-8200A/B	PRODUCED GAS CONDENSERS
E-8300A/B/C/D	EMULSION / BFW EXCHANGERS
F-7315	GLYCOL FILTER
F-8105A/B/C	EMULSION PUMP FILTERS
H-4100/4200/4300/4400/4500/4600/4700	H.P. STEAM GENS.
H-7340	GLYCOL HEATER
P-4020A/B/C/D/E	LP BFW PUMPS
P-4030A/B/C/D/E	HP BFW PUMPS
P-7120	FLARE KO PUMP
P-7160	CONTINUOUS CHD PUMP
P-7170	INTERMITTENT CHD PUMP
P-7320A/B	GLYCOL CIRCULATION PUMPS
P-7345	GLYCOL HEATER RECYCLE PUMP
P-7395	GLYCOL CHARGE PUMP
P-7515/7525	STEAM GENERATOR BUILDING SUMP PUMPS
P-7545	PROCESS BUILDING SUMP PUMP
P-7715	BLOWDOWN POND SUMP PUMP
P-7725	RUNOFF POND SUMP PUMP
P-8110A/B/C	EMULSION PUMPS
SF-7130	FLARE STACK
S-XXX	SEPARATOR SKID
S-XXX1	SWEETENING SKID 1 (2)
S-XXX2	SWEETENING SKID 2 (2)
T-4010	BFW TANK
T-7390	GLYCOL STORAGE TANK
T-7505	SEWER TANK
T-7510/T-7520	STEAM GENERATOR BULDING SUMPS
T-7540	PROCESS BUILDING SUMP
T-7719	BLOWDOWN POND SUMP
T-7729	RUNOFF POND SUMP
T-7620	DIESEL STORAGE TANK
T-8901	DEMULSIFIER TANK
T-8911	DEFOAMING TANK
T-8239	FRESH SCAVENGER TANK (2)
T-8240	SPENT SCAVENGER TANK (2)
T-8249	MEOH TANK
UH-7101	UNIT HEATER – BU-7100
UH-7601	UNIT HEATER – BU-7600
V-7110	FLARE KNOCK OUT DRUM
V-7150	CHD VESSEL
V-7230	FUEL GAS MIXING DRUM
V-7250	SITE GAS SLUG CATCHER
V-7310	GLYCOL EXPANSION DRUM
V-7450	INSTRUMENT AIR RECEIVER
V-7585A/B	PROCESS UTILITY WATER PRESSURE TANKS
V-7595	OFFICE UTILITY WATER PRESSURE TANK
V-8010	PRODUCTION SEPARATOR
V-8050	ANNULUS GAS SLUG CATCHER
V-8210	PRODUCED GAS SEPARATOR
W-7710	BLOWDOWN POND
W-7720	RUNOFF POND
X-7225	UTILITY FUEL GAS ODORIZER
Z-4990	POLYMER/CHELANT INJECTION PACKAGE
Z-7290	METHANOL INJECTION PACKAGE
Z-7400	INSTRUMENT AIR DRYER/COMPRESSOR PACKAGE
Z-7460	COOLING AIR COMPRESSOR PACKAGE
Z-7610	EMERGENCY GENERATOR PACKAGE
Z-8900	DEMULSIFIER INJECTION PACKAGE
Z-8910	DEFOAMING POLYMER INJECTION PACKAGE
Z-8920	OXYGEN SCAVENGER INJECTION PACKAGE
Z-4041A/B/C/D/E	HP BFW PUMP LUBE OIL SKIDS
C-XXX	COMPRESSOR SKID

REV.	DESCRIPTION	BY	DATE	CHK	APP.	CLIENT
2	PEP SWEETENING PACKAGE	KK	2011-08-03	BR		
1	ISSUED FOR CONSTRUCTION – GAS CONSERVATION (CS15373)	SS	11/02/25			
0	ISSUED FOR CONSTRUCTION	PP	2006/12/14	IC		

DRAWING NO. | REFERENCE DRAWINGS | DRAWING PREPARED BY: CALTECH SENEX CS15373

DRAWN BY: IAN CLARK	DATE 2006/03/14
DESIGNED BY: IAN CLARK	DATE 2006/03/14
CHECKED BY: ALAN SMITH	DATE 2006/03/16
APPROVED BY:	DATE
CLIENT BY:	DATE

Canadian Natural — Caltech Senex

TITLE: SW 1/4 SEC.14 TWP.67 RGE.3 W.4 MER.
PRIMROSE EAST PLANT
PLOT PLAN

SCALE	AFE	JOB NO.	DRAWING NO.	REV.
1:1000	FC101422	CS15373	PEP-U1-210-0001	2

SCALE APPLIES IF PLOTTED ON SIZE "D" (22"X34")

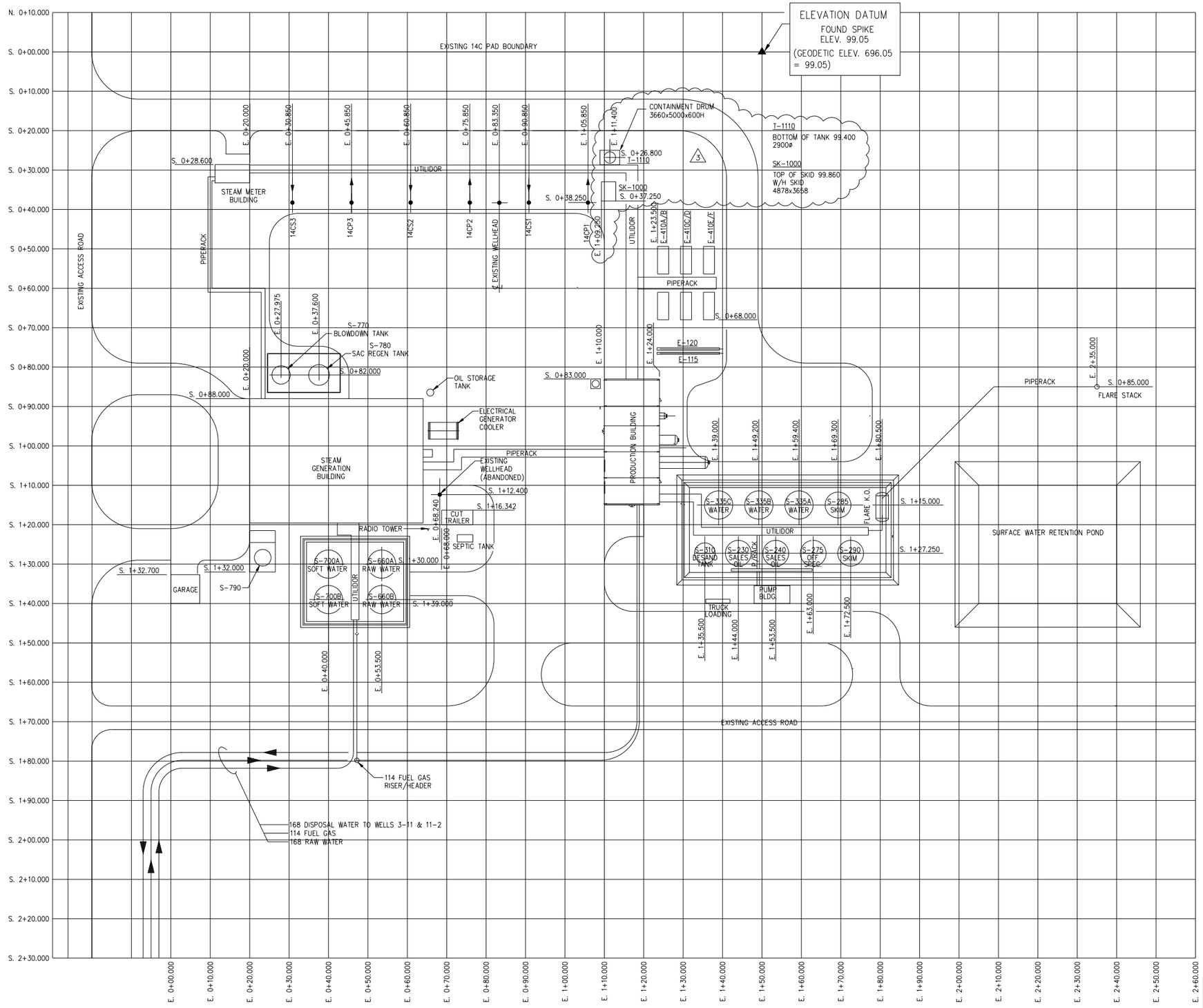

Macdonald Engineering Group Ltd.
CALGARY ALBERTA CANADA

DRAWN: J.G. BASSETT	DATE 95.07.30	Gemini Engineering Ltd. — PROJECT MANAGEMENT – DESIGN, CALGARY, ALBERTA
CHECKED:	DATE	
APPROVED:		Suncor inc. Resources Group
CLIENT APPROVAL:		BURNT LAKE THERMAL PROJECT 14C PAD – N.W. 1/4 SEC. 14 TWP. 67 RGE. 3 W.4 M. PLOT PLAN
SCALE: 1:500		
PROJECT No: G95-135	CLIENT DWG. No: D-BUR1414-210-03	GEMINI DWG. No: G95-135-PP-001 — REV. 3

NOTES:

No	DATE	REVISIONS	DRAWN	CHK.	APPD.	CLIENT APPL.
3	99.08.20	ADDED SK-1000, T-1110	SW	GP		
2	97.02.04	AS BUILT	LGP			
1	96.08.05	REVISED AS NOTED	S.L.			
0	96.06.14	ISSUED FOR CONSTRUCTION	S.L.	S.L.		

FILE NAME: L:\DRAFT\G95135\D\PIP\95135PP1.dwg PLOT DATE: 97.06.06

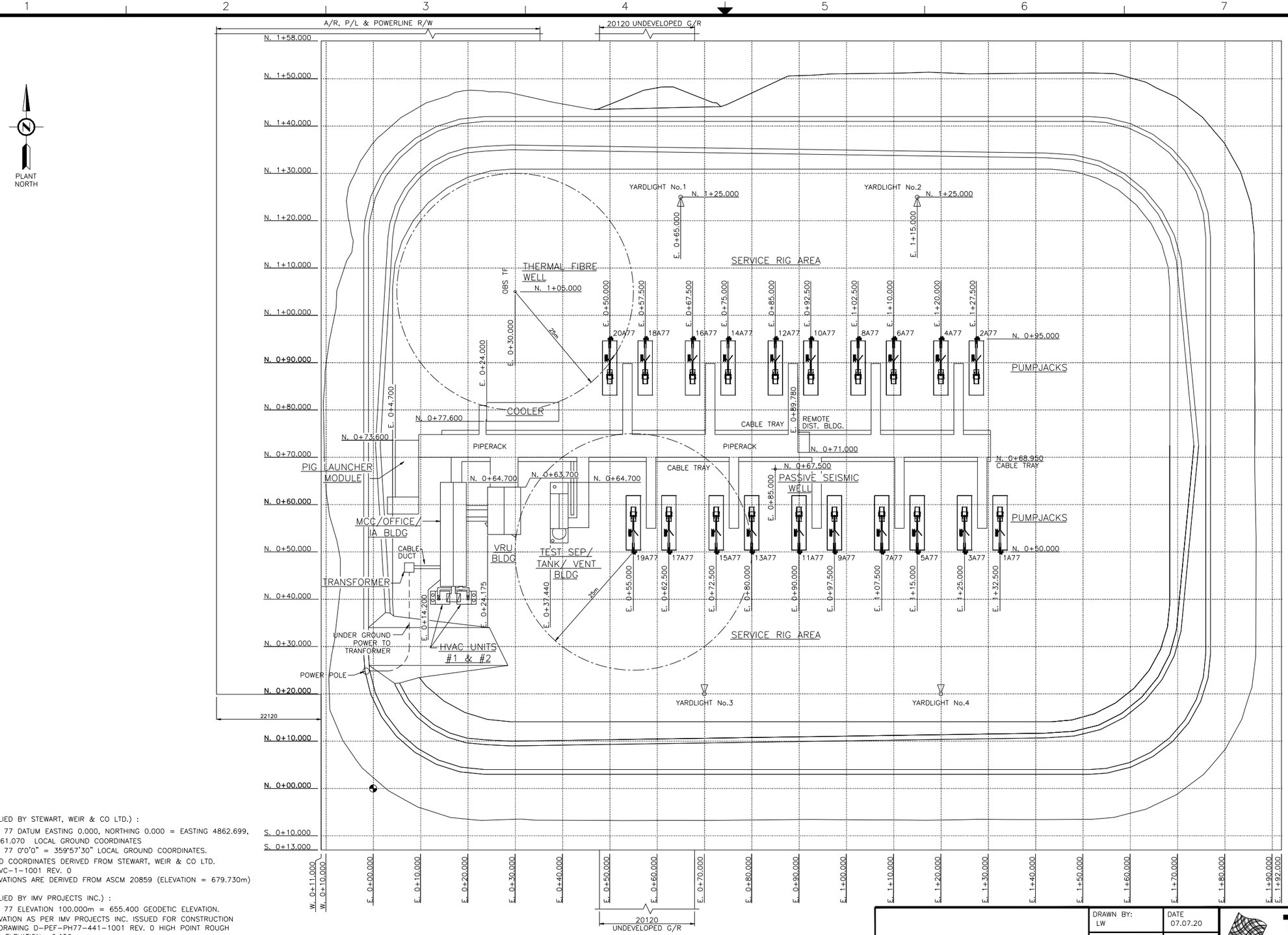

NOTES (AS SUPPLIED BY STEWART, WEIR & CO LTD.) :

1. ASSUMED PAD 77 DATUM EASTING 0.000, NORTHING 0.000 = EASTING 4862.699, SOUTHING 18161.070 LOCAL GROUND COORDINATES
2. ASSUMED PAD 77 0°0'0" = 359°57'30" LOCAL GROUND COORDINATES.
3. LOCAL GROUND COORDINATES DERIVED FROM STEWART, WEIR & CO LTD. PLAN 31369-VC-1-1001 REV. 0
4. GEODETIC ELEVATIONS ARE DERIVED FROM ASCM 20859 (ELEVATION = 679.730m)

NOTES (AS SUPPLIED BY IMV PROJECTS INC.) :

1. ASSUMED PAD 77 ELEVATION 100.000m = 655.400 GEODETIC ELEVATION.
2. GEODETIC ELEVATION AS PER IMV PROJECTS INC. ISSUED FOR CONSTRUCTION EARTHWORKS DRAWING D-PEF-PH77-441-1001 REV. 0 HIGH POINT ROUGH GRADE (HPRG) ELEVATION +0.150m

DRAWING NO.	REFERENCE DRAWINGS	REV.	DESCRIPTION	BY	DATE	CHK	APP.	CLIENT
		1	ISSUED FOR CONSTRUCTION	LW	07.09.10	–	–	–

DRAWN BY: LW	DATE 07.07.20
DESIGNED BY: –	DATE –
CHECKED BY: –	DATE –
APPROVED BY: –	DATE –
CLIENT BY: –	DATE –

Tartan ENGINEERING CALGARY ALBERTA

Canadian Natural

TITLE
EAST PRIMROSE PRODUCTION PAD 77
LSD 13-06-67-02 W4M
PRODUCTION PAD
SITE PLAN

SCALE	JOB NO.	DRAWING NO.	REV.
NTS	332300	PEF-PH77-210-0001	1

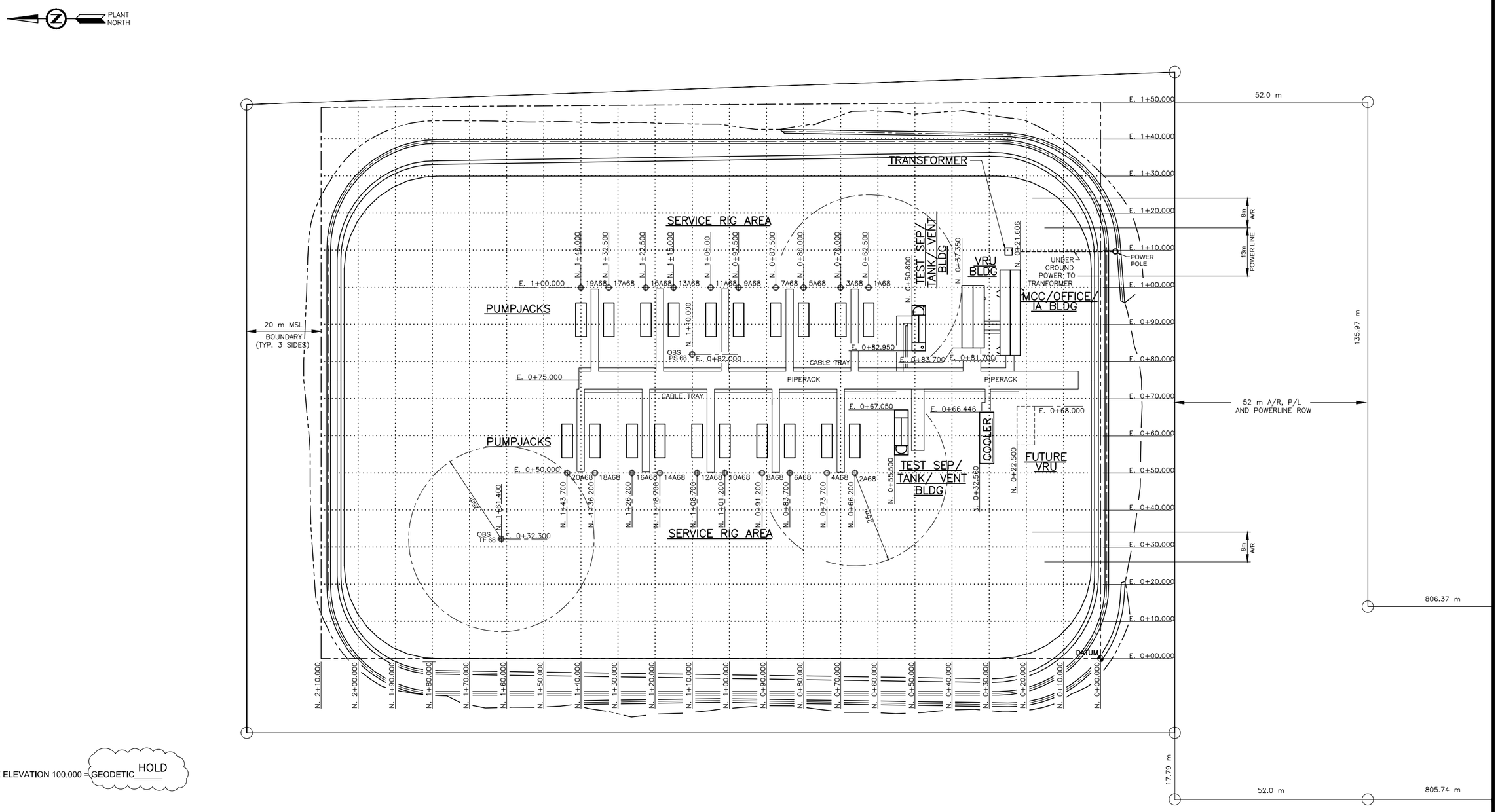

REV.	DESCRIPTION	BY	DATE	CHK	APP.	CLIENT
02	AS-BUILT	MS	2013-09-25			
01	ISSUED FOR CONSTRUCTION	ML	2012-06-29			
B	PRELIMINARY DESIGN AND CLIENT REVIEW	CJP	2012-03-14			
A	CONCEPTUAL	DF	2011-07-18			

DRAWING NO. | REFERENCE DRAWINGS | DRAWINGS PREPARED BY: WOOD GROUP PSN 113808

DRAWN BY: DF	DATE 2011-07-18
DESIGNED BY:	DATE
CHECKED BY:	DATE
APPROVED BY:	DATE
CLIENT BY:	DATE

Canadian Natural

WOOD GROUP PSN

TITLE PRIMROSE NORTH PRODUCTION PAD 68
LSD 07-22-068-04 W4M
PRODUCTION PAD
SITE PLAN

SCALE	JOB NO.	DRAWING NO.	REV.
1:500	113808	PNF-PH68-210-0001	02

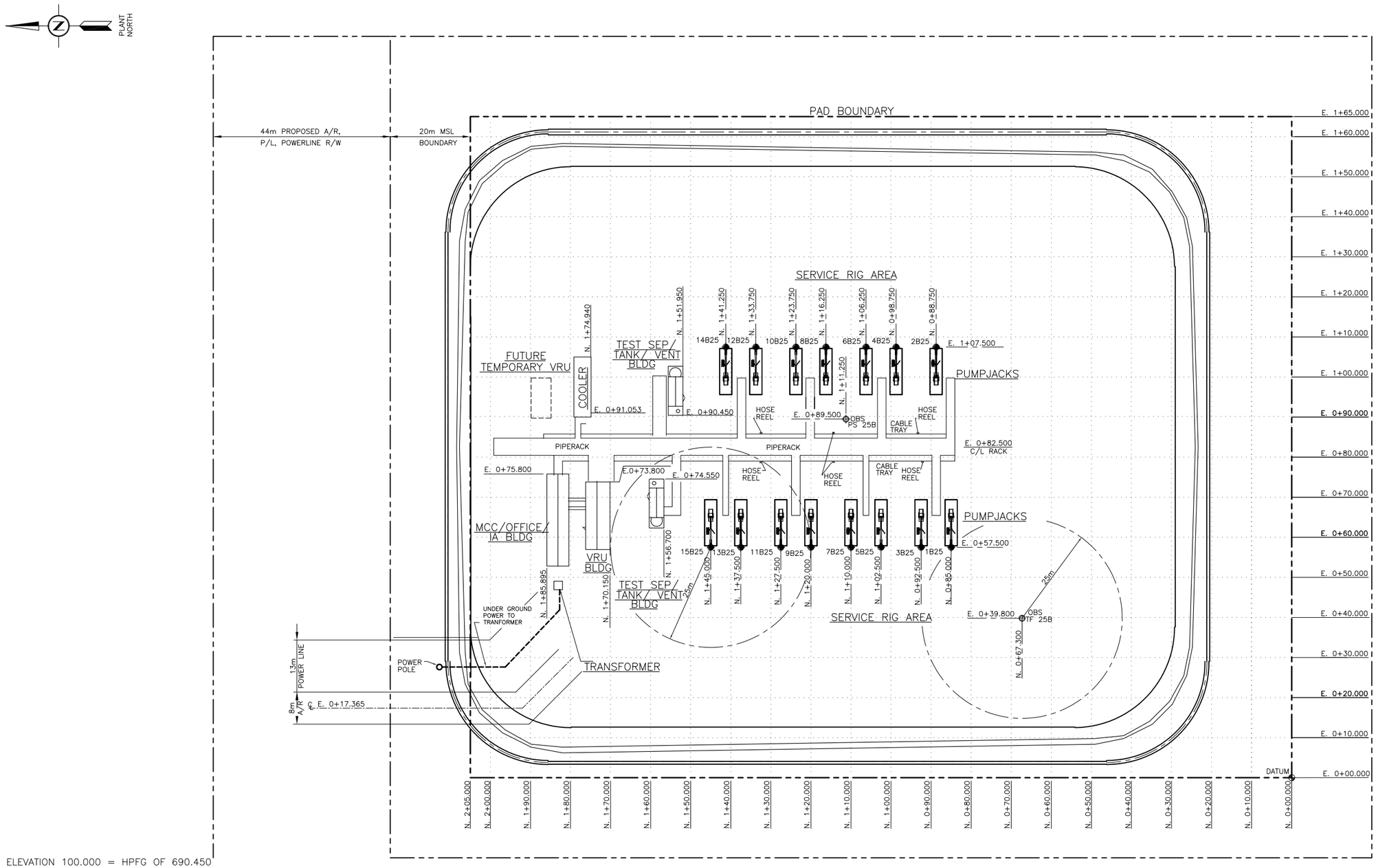

GRADE ELEVATION 100.000 = HPFG OF 690.450

DRAWING NO.	REFERENCE DRAWINGS
010032544WSSU02-R02	FOCUS SURVEY DRAWING

DRAWINGS PREPARED BY: WGPSN 113841

REV.	DESCRIPTION	BY	DATE	CHK	APP.	CLIENT
03	AS BUILT	ML	2013-05-27			
02	RE-ISSUED FOR CONSTRUCTION - POWER POLE MOVED	CJP	2012-05-15			
01	ISSUED FOR CONSTRUCTION	CJP	2012-02-10			

DRAWN BY: CJP	DATE 2011-09-01		
DESIGNED BY: ML	DATE -		
CHECKED BY: -	DATE -		
APPROVED BY: -	DATE -		
CLIENT BY: -	DATE -		

Canadian Natural

WOOD GROUP PSN

TITLE PRIMROSE SOUTH PRODUCTION PAD 25B
LSD 05-02-067-04 W4M
PRODUCTION PAD 25B
SITE PLAN

SCALE	JOB NO.	DRAWING NO.	REV.
1:500	113841	PRF-PH25B-210-0001	03

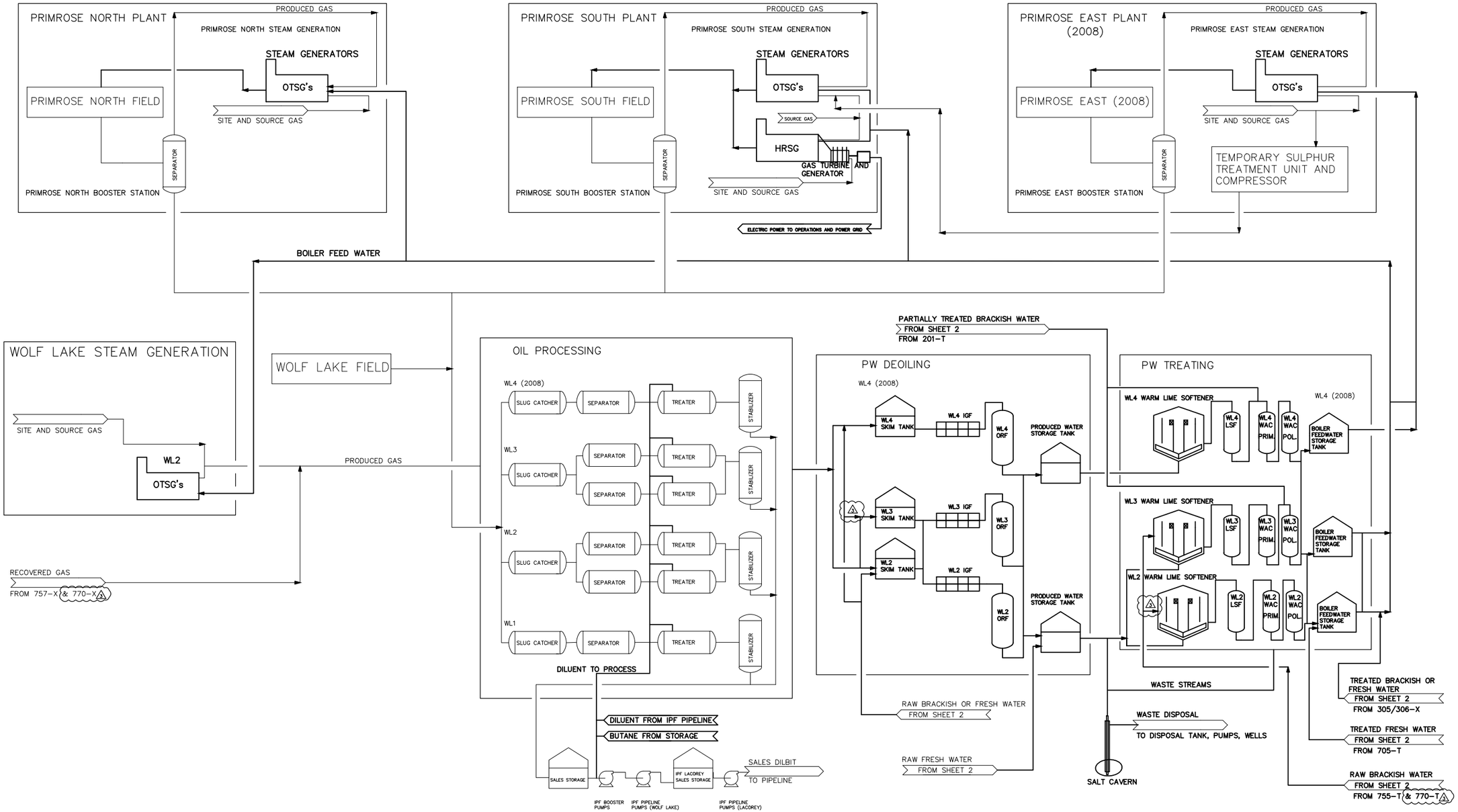

DRAWING NO.	REFERENCE DRAWINGS	
		DRAWINGS PREPARED BY : CANADIAN NATURAL XXXXXX

REV.	DESCRIPTION	BY	DATE	CHK	APP.	CLIENT
3	AS PER FIELD MARK-UPS	KK	2012-01-12	JR		
2	ISSUED FOR 2009 ERCB REVIEW	RDR	10/01/07			
1	ISSUED FOR 2008 ERCB REVIEW	RDR	09/01/23			
0	ISSUED FOR 2007 ERCB REVIEW	RDR	08/01/22			

DRAWN BY:	DATE
DESIGNED BY:	DATE
CHECKED BY:	DATE
APPROVED BY:	DATE
CLIENT BY:	DATE

Canadian Natural

TITLE
PRIMROSE AND WOLF LAKE
SIMPLIFIED PLANT FACILITY SCHEMATIC
SHEET 1 of 2

SCALE	JOB NO.	DRAWING NO.	REV.
N.T.S.	–	WLP-AU-223-0013	3

WLP-AU-223-0013

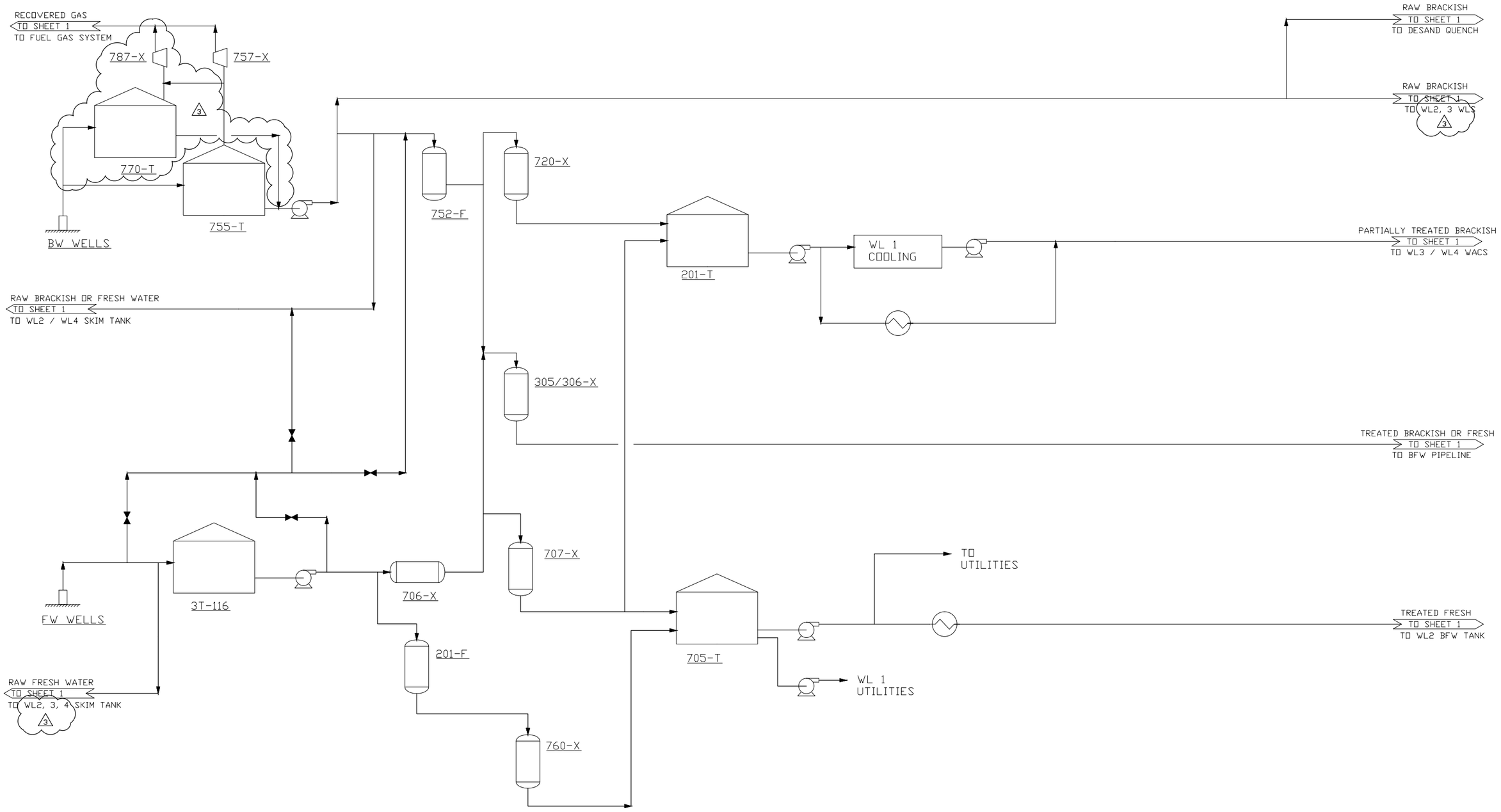

DRAWING NO.	REFERENCE DRAWINGS	DRAWINGS PREPARED BY: CANADIAN NATURAL XXXXXX

REV.	DESCRIPTION	BY	DATE	CHK	APP.	CLIENT
3	ISSUED FOR 2011 ERCB REVIEW	KK	2012-01-12	SHR		
2	ISSUED FOR 2009 ERCB REVIEW	RDR	10/01/07			
1	ISSUED FOR 2008 ERCB REVIEW	RDR	09/01/23			
0	ISSUED FOR 2007 ERCB REVIEW	RDR	08/01/22			

DRAWN BY:	DATE
DESIGNED BY:	DATE
CHECKED BY:	DATE
APPROVED BY:	DATE
CLIENT BY:	DATE

Canadian Natural

TITLE
PRIMROSE AND WOLF LAKE
SIMPLIFIED PLANT FACILITIES SCHEMATIC
SHEET 2 of 2

SCALE	JOB NO.	DRAWING NO.	REV.
N.T.S.	–	WLP-AU-223-0014	3